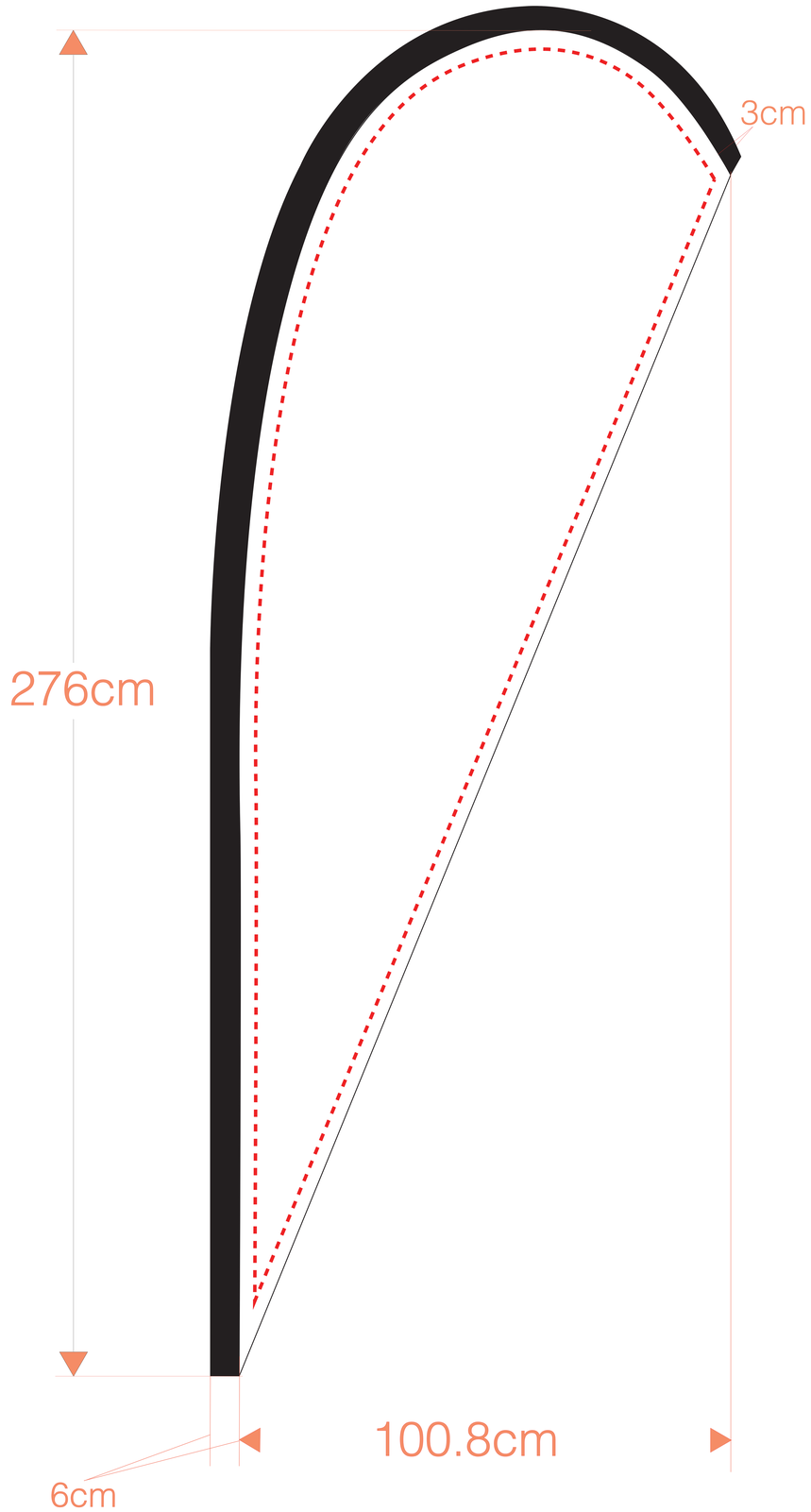

SPOON COD. 14436
276*100.8CM

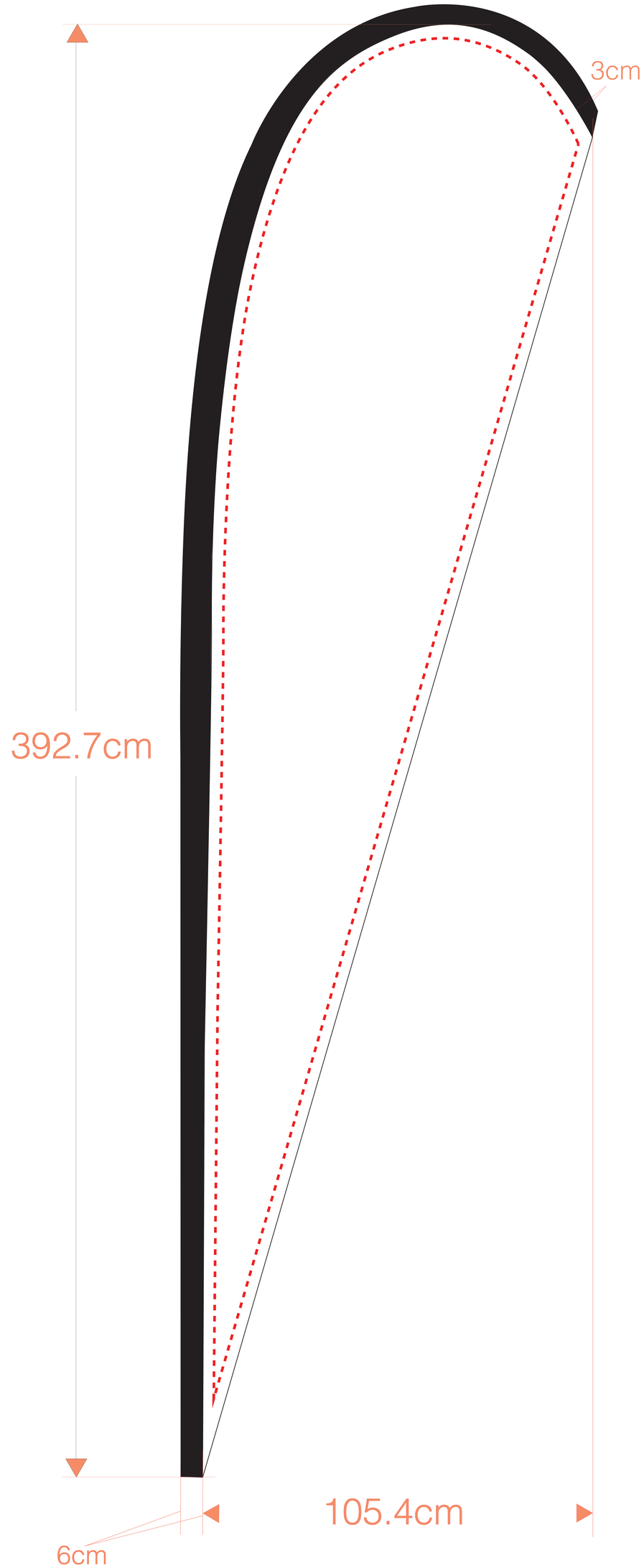

SPOON COD.14437
392.7*105.4CM

Scale: 100%

----------	Live Area
----------	Print Size
————	Sleeve